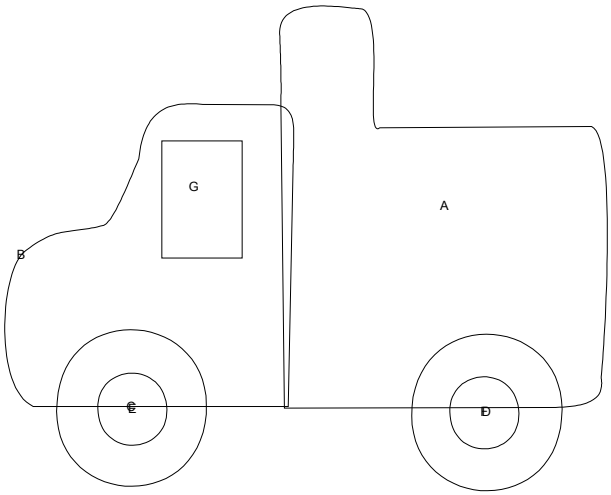

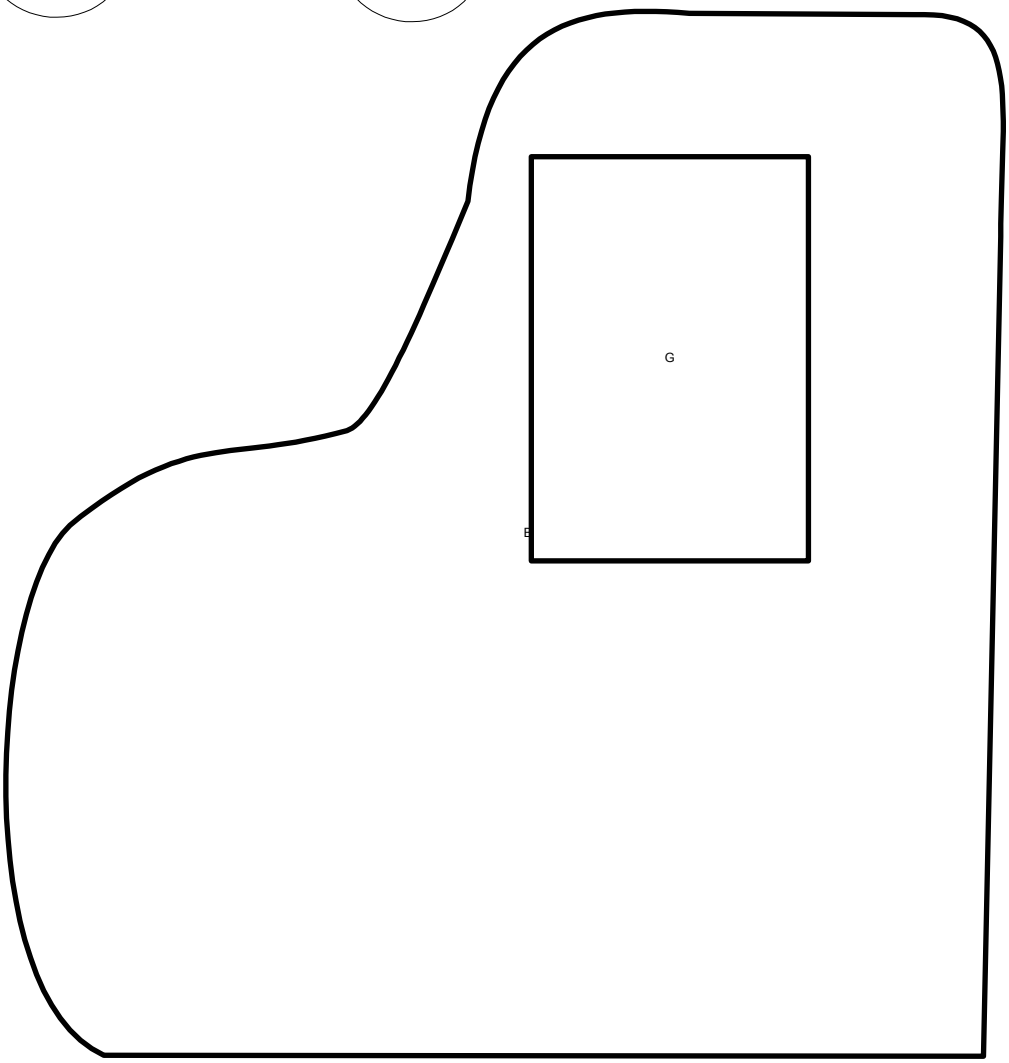

Template "A" is your base block. These appliques are for 12.5 inch blocks.

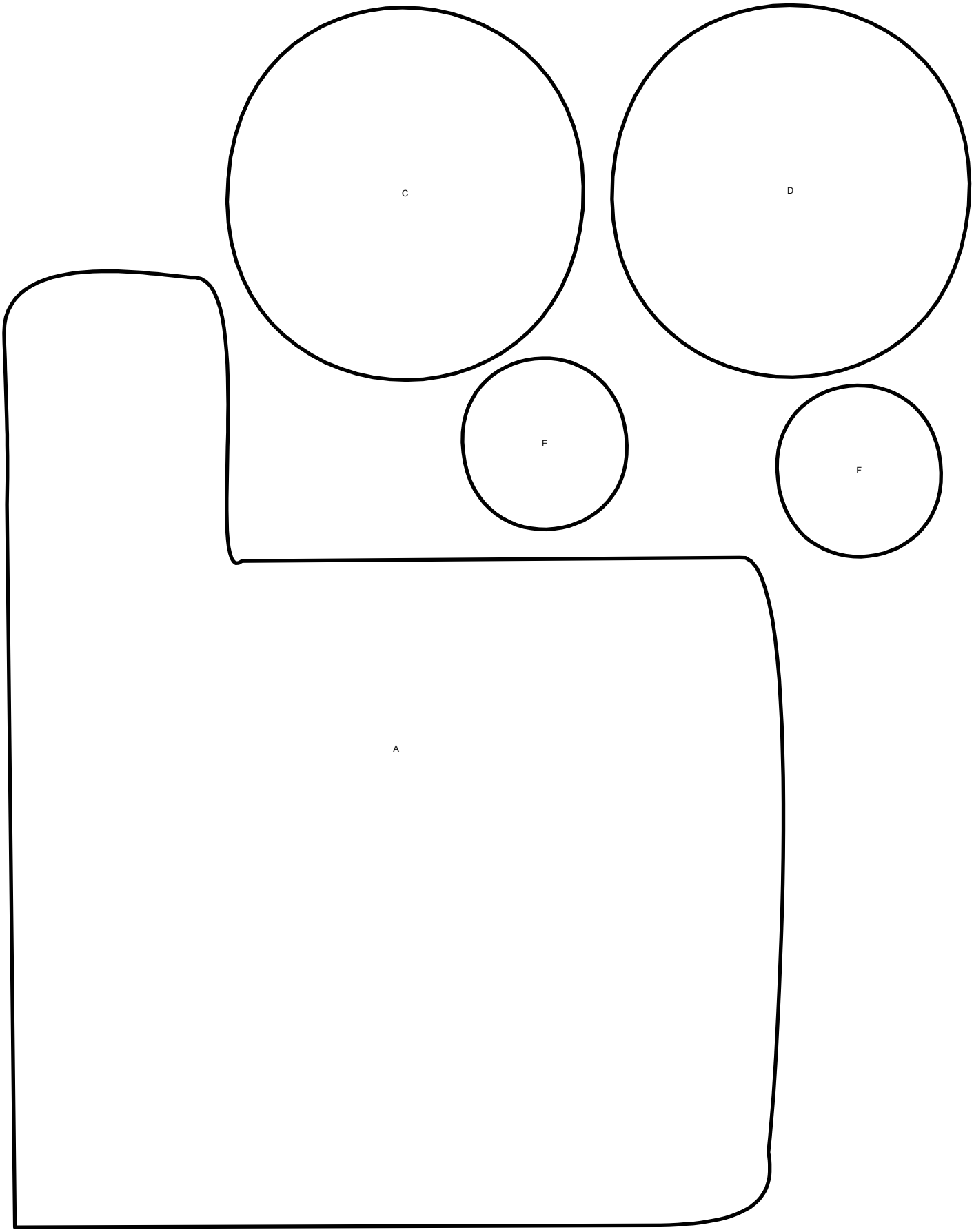

2008 - © Sindy Rodenmayer www.fatcatpatterns.com

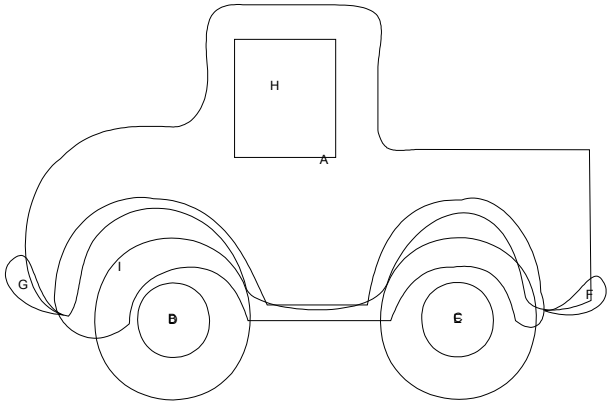
H
A
I
G
F
B
C

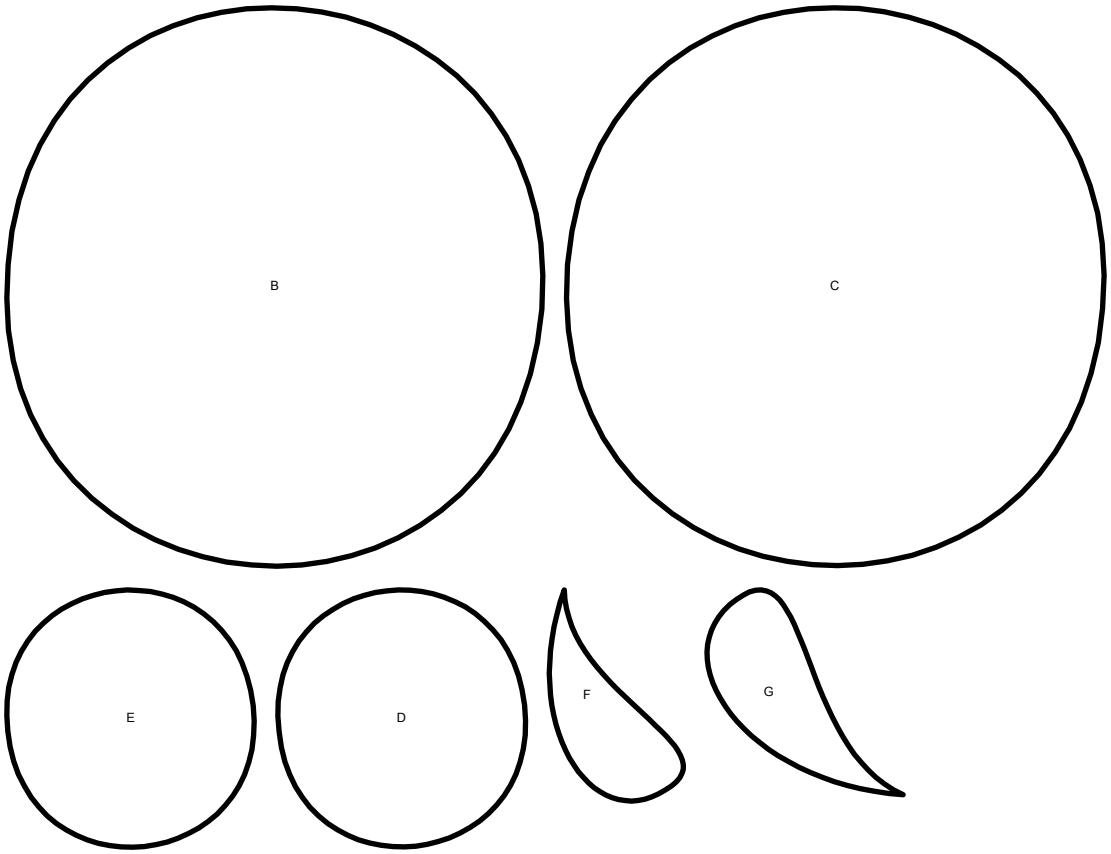
B
C
E
D
F
G

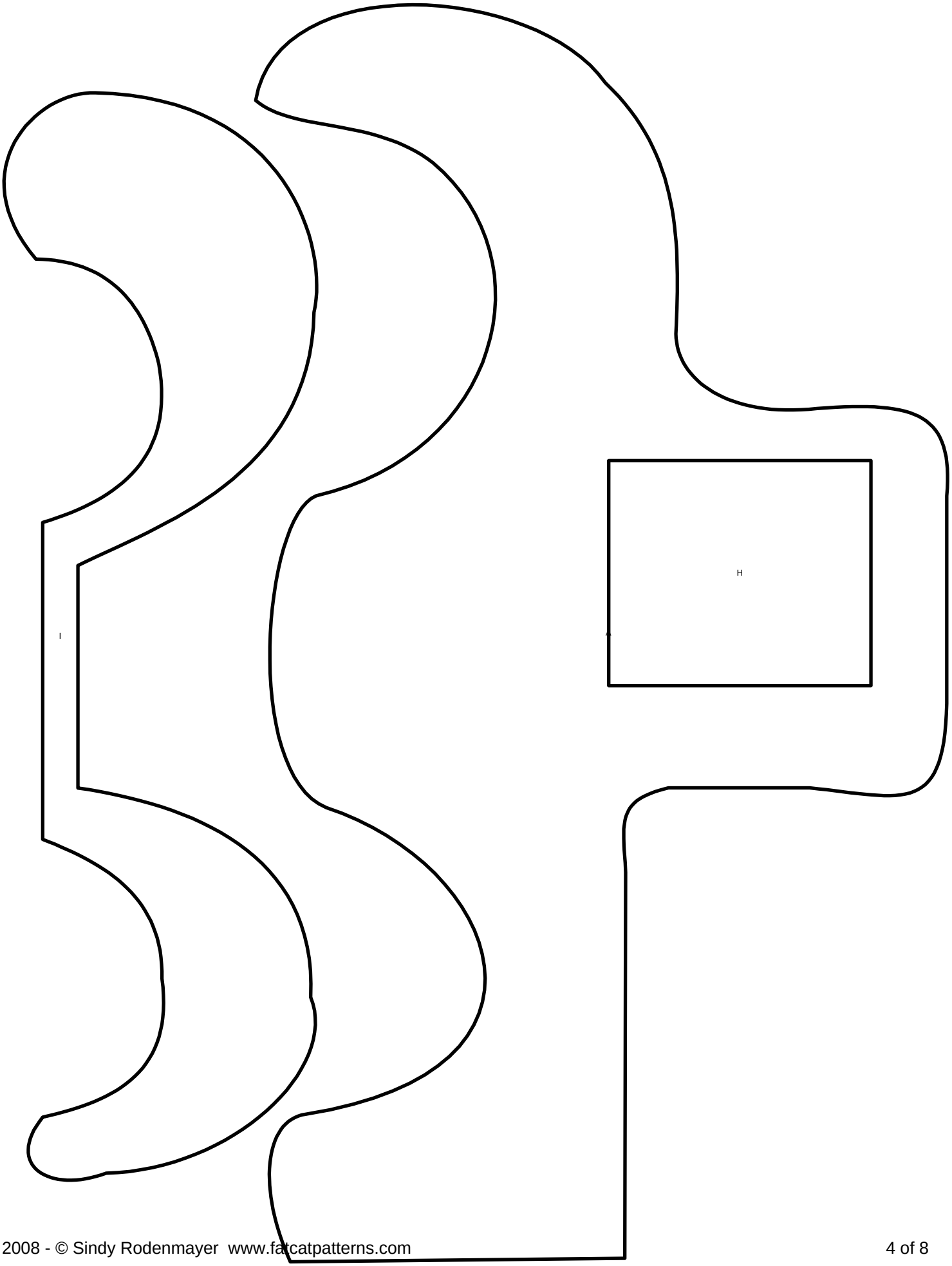
H
I

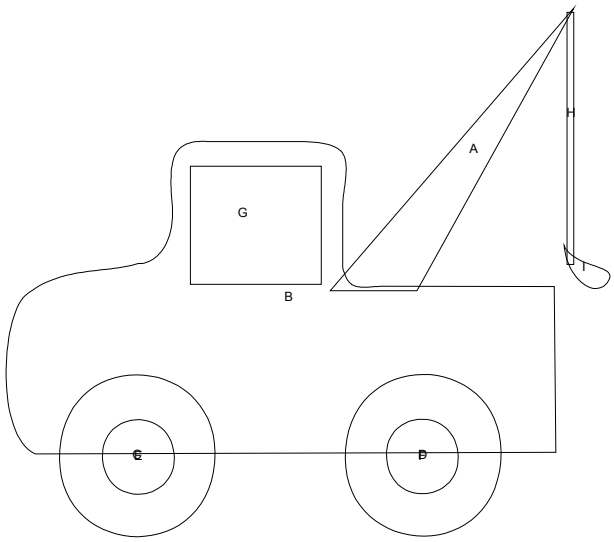
A
H
G
I
B
C
D

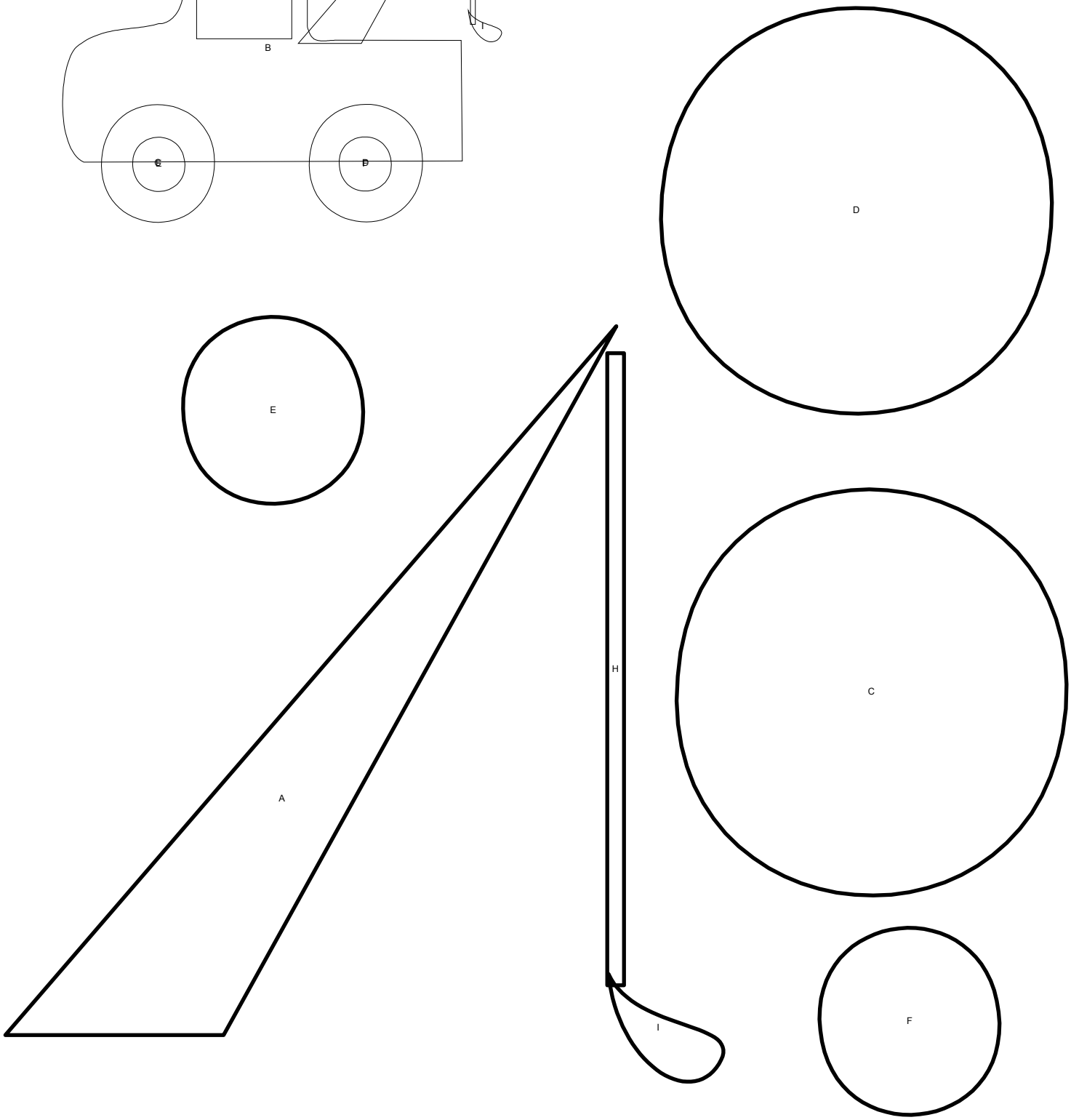
D
E
H
C
A
I
F

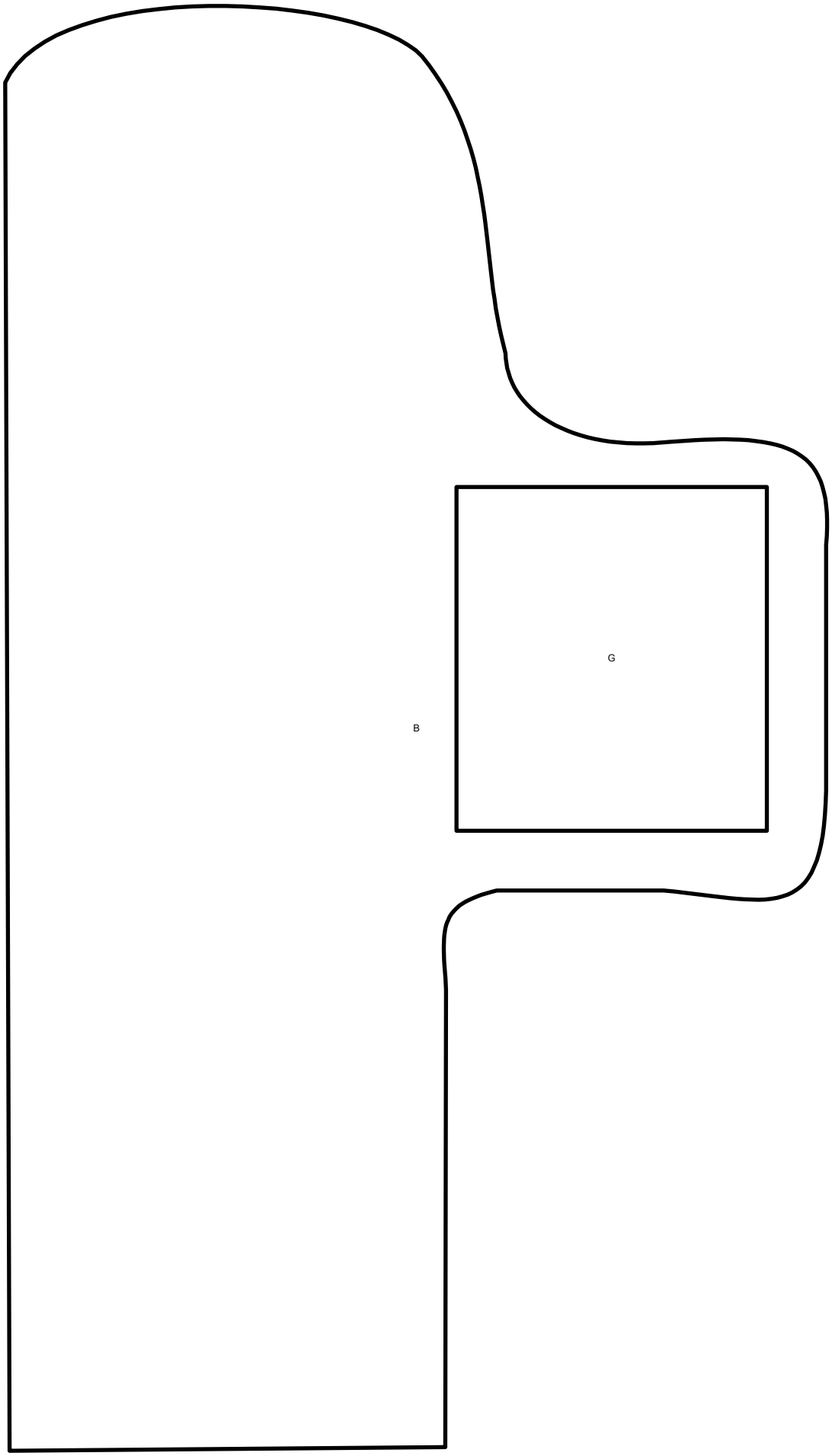
G
B

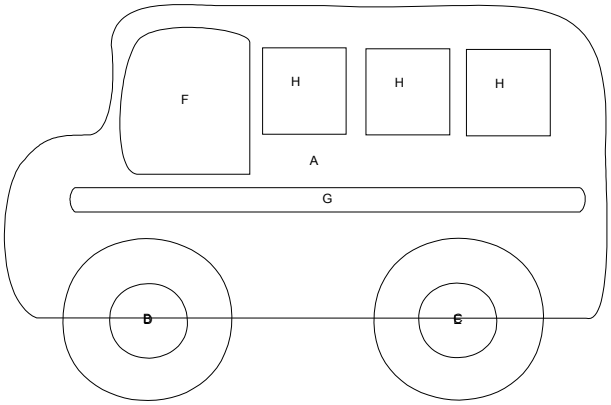
F
H
H
H
A
G
B
C

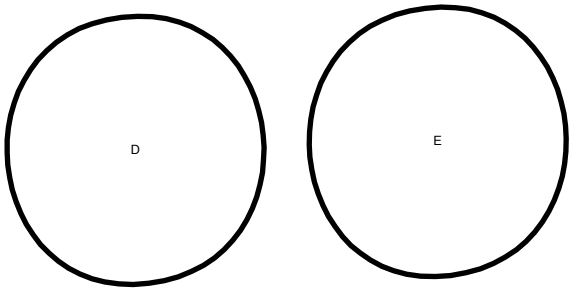
D
E

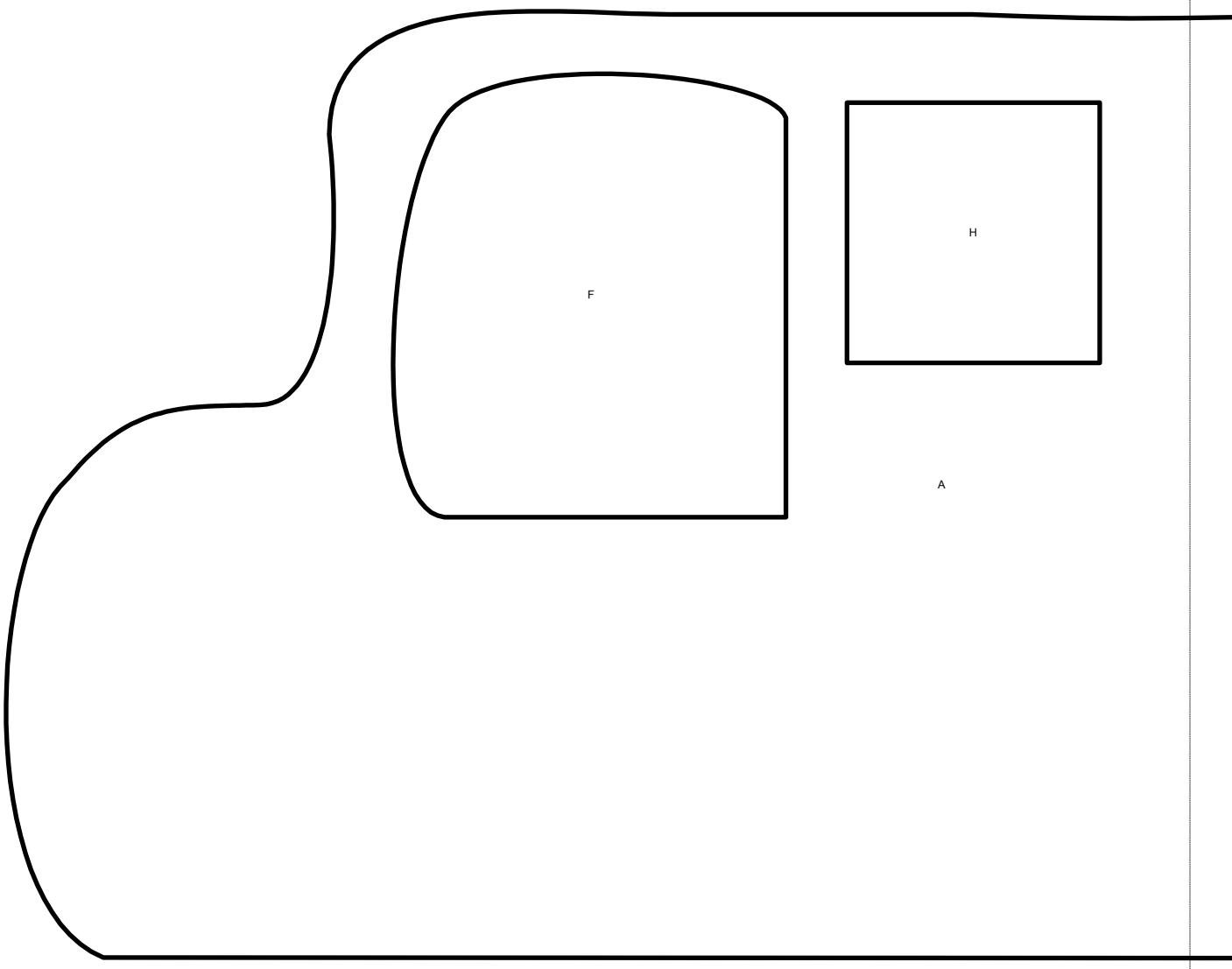
F
H
A

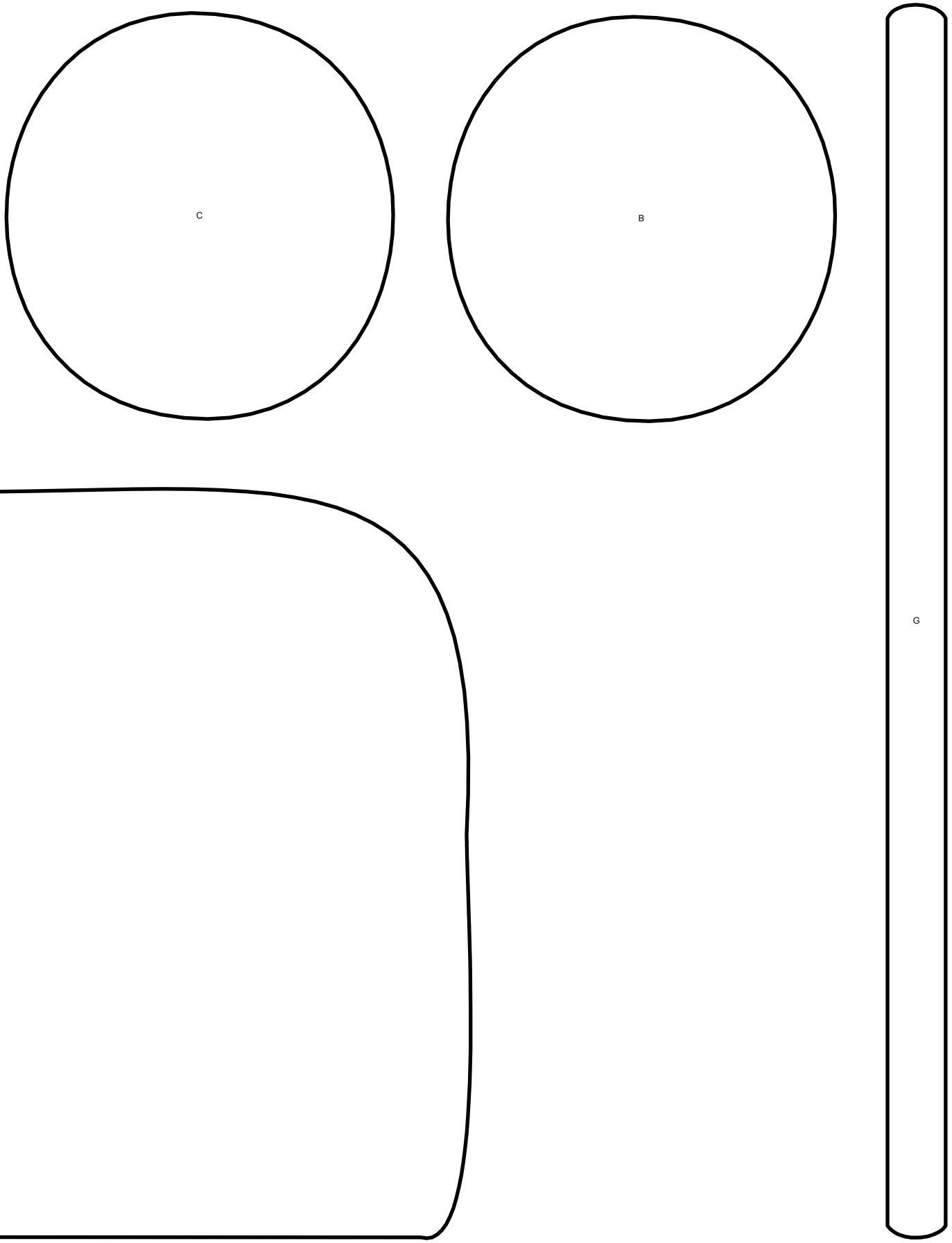

2008 - © Sindy Rodenmayer www.fatcatpatterns.com